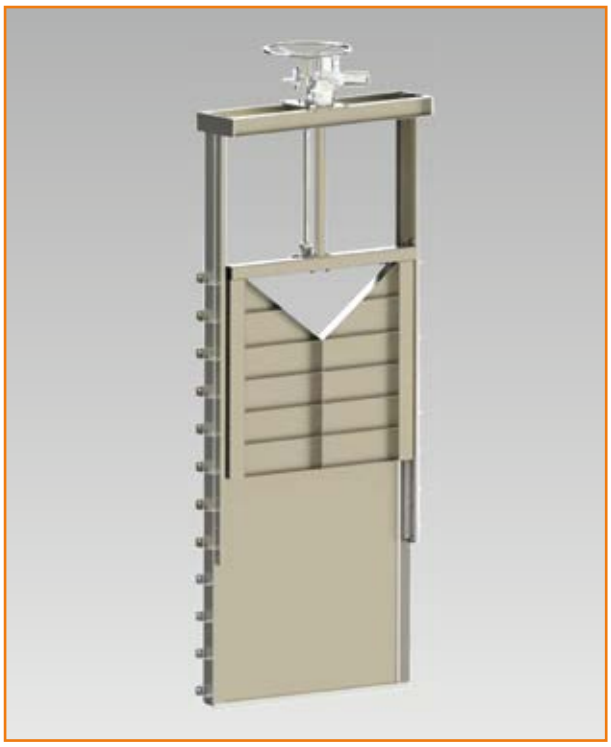

WALL PENSTOCK WITH TWO GATES TYPE MV-ZN2P

- wall penstocks are used for shutting off or adjusting the flow in channels with drinking water, waste water, cooling water, river water etc.,
- characteristic two-gate design provides liquid level control (upper gate) and enables the periodic removal of sediment from the bottom (lower gate),
- FEM-aided individual structural calculations performed for specific operational parameters and places of installation,
- all stainless steel elements undergo etching and passivation by dipping or spraying,
- actuator is mounted directly on a frame, central or shifted support,
- penstocks are pressure tested in the factory.

TECHNICAL DATA

Work pressure:	up to 6mH_2O (tightness based on DIN 19569-4, tightness class: 3), available up to 10mH_2O on special orders
Penstock width: [mm]	150 to 4000, penstocks of widths exceeding 4000 are made to special orders
Gate height: [mm]	150 to 4000, penstocks of gate heights exceeding 4000 are made to special orders
Material:	1.4301, 1.4541, 1.4571, Duplex, etc.
Actuator:	electric, pneumatic, hand actuator, bevel gear
Seal:	NBR, EPDM, Viton or others

multivalve

Penstock type MV-ZN2P

Penstock with two gates with a central support

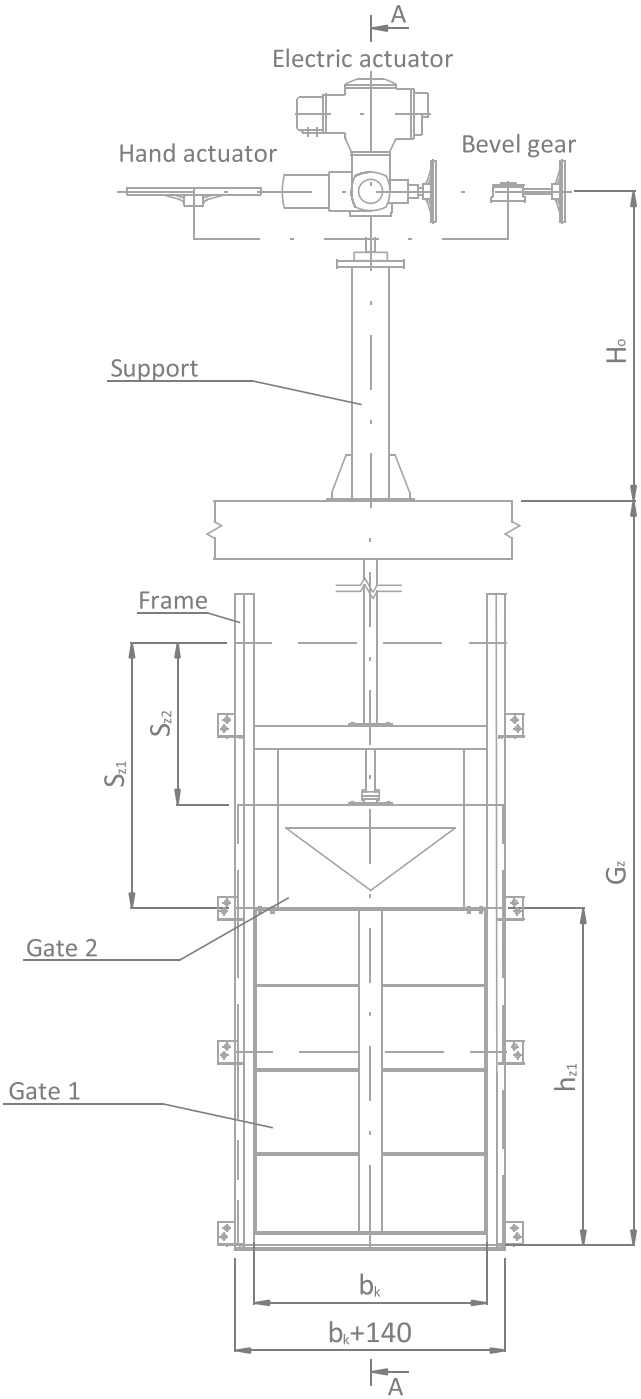

Channel width	b_k=.....
Gate 1 height	h_{z1}=.....
Gate 2 height	h_{z2}=.....
Depth	G_z =.....
Scope 1	S_{z1}=.....
Scope 2	S_{z2}=.....
Height from operating level	H_0=.....
Actuator 1	.....
Actuator 2	.....
Pressure [mH_2O]	.....

Bottom type*:

Standard/for cementing

Seal*:

NBR/EPDM/Viton

* delete as appropriate

A-A

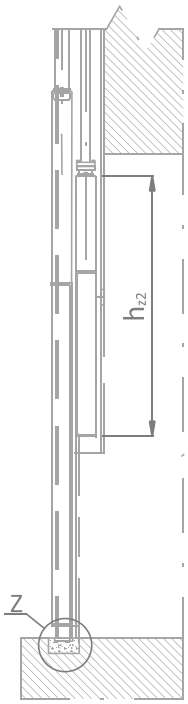

Z

standard

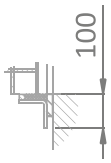

for cementing

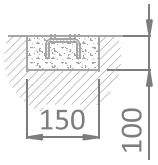

multivalve

Penstock type MV-ZN2P

Penstock with two gates with a shifted support

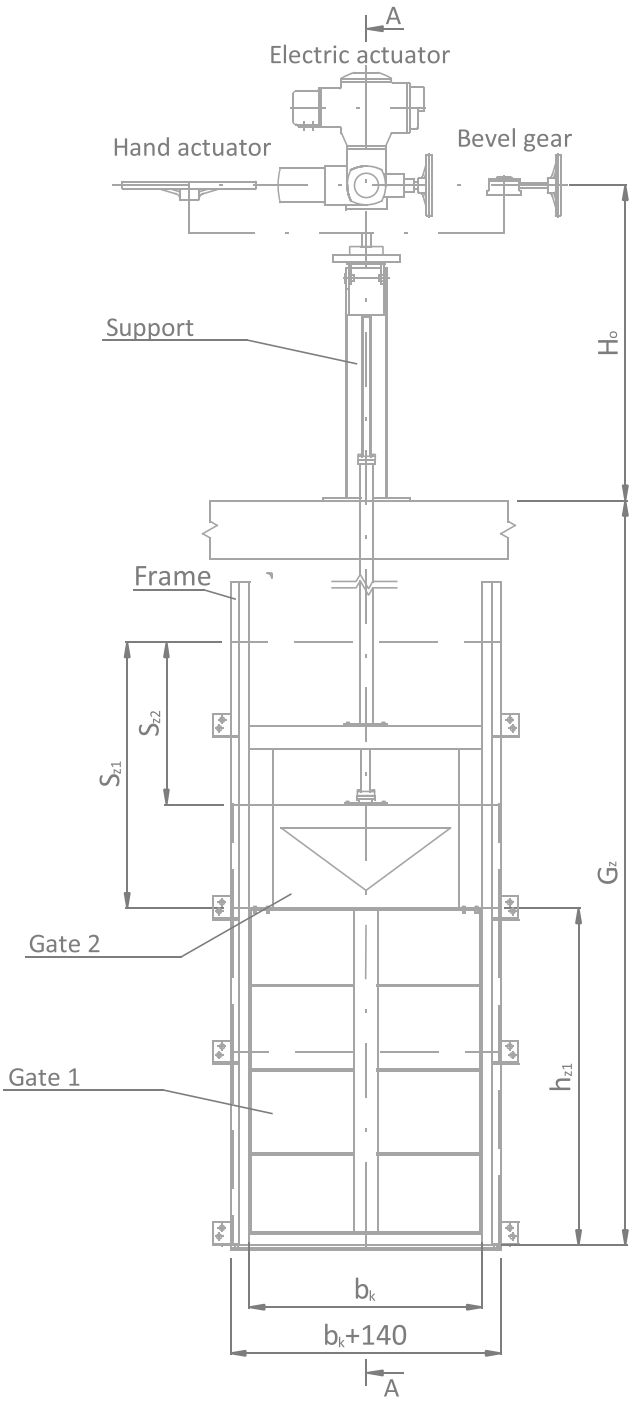

Channel width	b_k=.....
Gate 1 height	h_{z1}=.....
Gate 2 height	h_{z2}=.....
Depth	G_z =.....
Scope 1	S_{z1}=.....
Scope 2	S_{z2}=.....
Height from operating level	H_0=.....
Actuator 1	.....
Actuator 2	.....
Pressure [mH_2O]	.....
Bottom type*:	
Standard/for cementing	
Seal*:	
NBR/EPDM/Viton	

* delete as appropriate

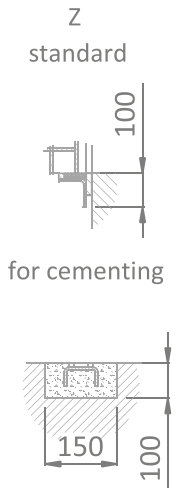

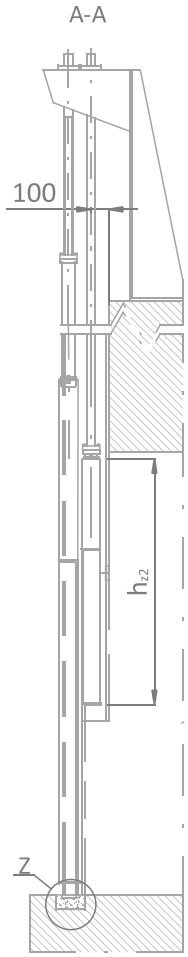

multivalve

Penstock type MV-ZN2P

Penstock with two gates with a frame extended to the operating level

Channel width	b_k=……
Gate 1 height	h_{z1}=……
Gate 2 height	h_{z2}=……
Depth	G_z =……
Scope 1	S_{z1}=……
Scope 2	S_{z2}=……
Height from operating level	H_0=……
Actuator 1	……
Actuator 2	……
Pressure [mH_2O]	……

Bottom type*:

Standard/for cementing

Seal*:

NBR/EPDM/Viton

* delete as appropriate

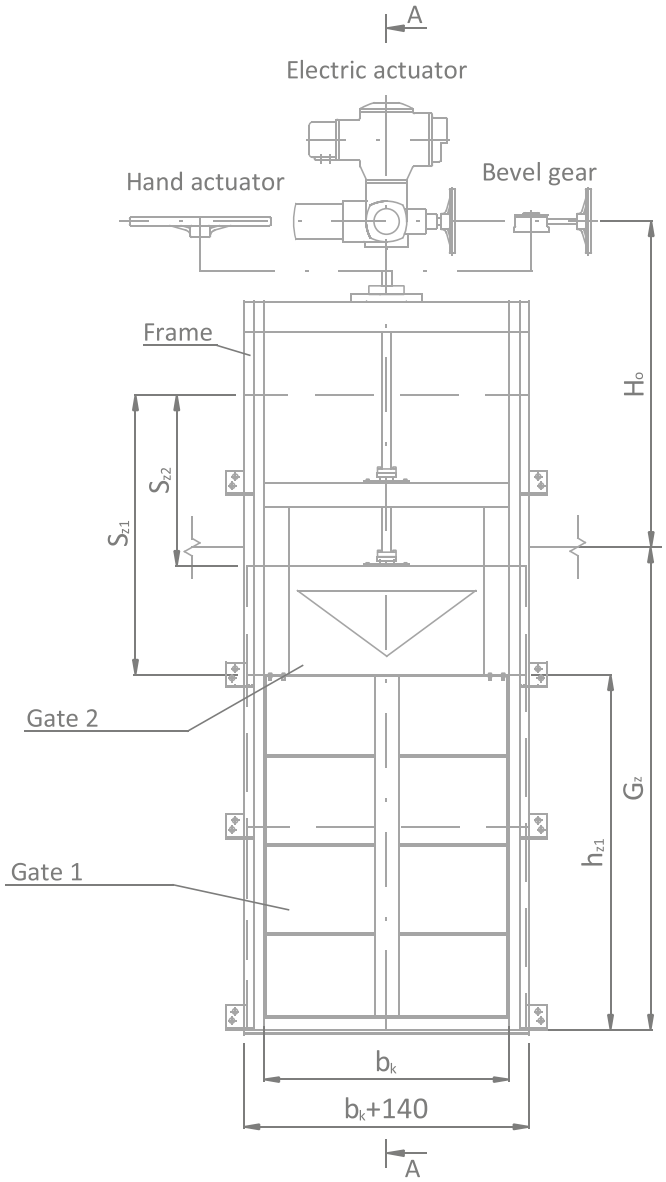

A-A

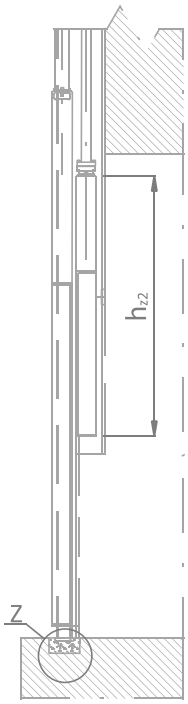

Z

standard

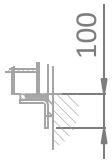

for cementing

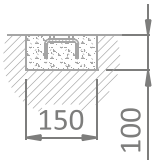

multivalve

Penstock type MV-ZN2P

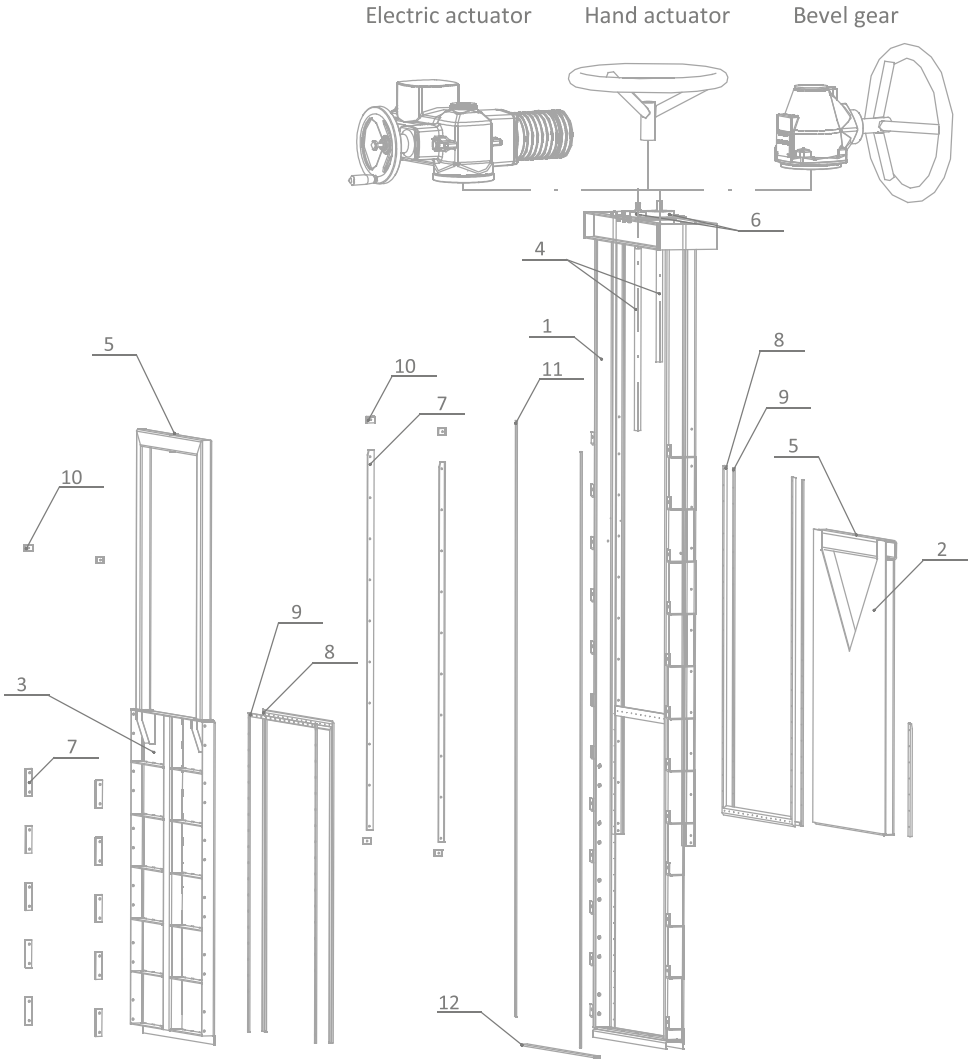

No.	Element	Material*
1	Welded frame	1.4301, 1.4541, 1.4571, Duplex, etc.
2	Top gate	1.4301, 1.4541, 1.4571, Duplex, etc.
3	Bottom gate	1.4301, 1.4541, 1.4571, Duplex, etc.
4	Stem	1.4301, 1.4541, 1.4571, etc.
5	Stem nut	Self-lubricating brass Rg7
6	Ball bearings	Stainless steel
7	Sliders	POM-C or PTFE
8	Seal	NBR, EPDM, Viton
9	Seal holdfast	1.4301, 1.4541, 1.4571, Duplex, etc.
10	Bumper	POM-C or PTFE
11	Wall seal	Foam
12	Lower seal	NBR, EPDM, Viton

* Delete as appropriate. Other versions available on special order.

multivalve

Multivalve Sp. z o. o.
44-109 Gliwice, ul. Eiffel'a 6
phone: + 48 32 661 00 00
fax: + 48 32 661 00 01
multivalve@multivalve.pl
www.multivalve.pl

Certyfikat TÜV Rheinland
ISO 9001 – 2008

MV 09 08 2017